LEO®

3.0 INNOVATION



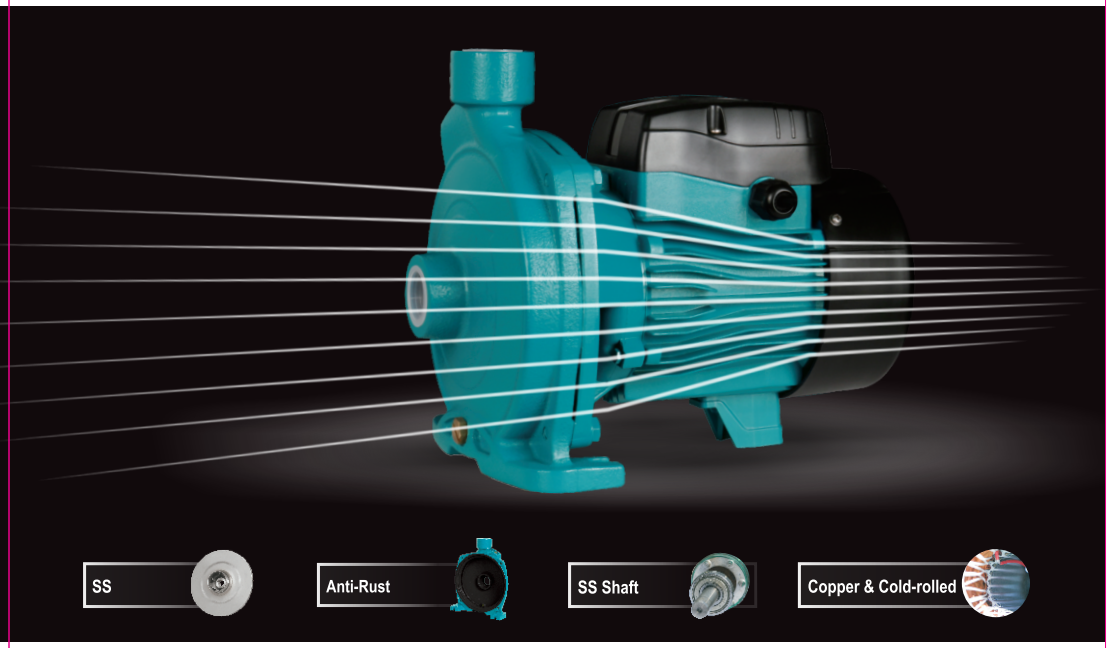

CENTRIFUGAL PUMPS

LEO GROUP PUMP(ZHEJIANG) CO.,LTD.

Add: No.1,3rd Street, East Industry Center,317500
Wenling City, Zhejiang P.R.China
Tel: 0086-576-89986360
Fax: 0086-576-89989898
Email:export@leogroup.cn
www.leogroup.cn

ACm

CONTENTS

1. Applications 2
2. Model Description..... 2
3. Technical Data..... 2
4. Implementation Standards..... 3
5. Safety Precautions 3
6. Product Structure 5
7. Pipeline Installation 6
8. Electrical Connection..... 8
9. Start-up and Maintenance 9
10. Troubleshooting 10

This appliance can be used by children aged from 8 years and above and persons with reduced physical, sensory or mental capabilities or lack of experience and knowledge if they have been given supervision or instruction concerning use of the appliance in a safe way and understand the hazards involved.
Children shall not play with the appliance. Cleaning and user maintenance shall not be made by children without supervision.

Attention!
If the appliance or the supply cord is damaged, it must be repaired by manufacturer, its service agent or qualified person.



Meaning of crossed –out wheeled dustbin:
Do not dispose of electrical appliances as unsorted municipal waste, use separate collection facilities.
Contact you local government for information regarding the collection systems available.

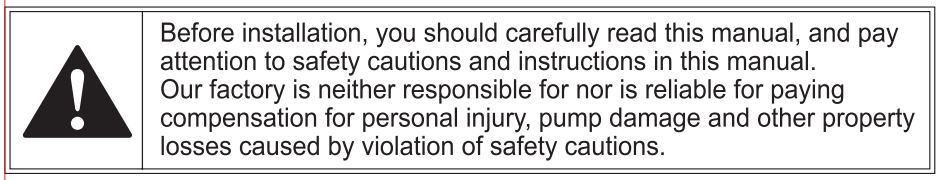

Before installation, you should carefully read this manual, and pay attention to safety cautions and instructions in this manual.
Our factory is neither responsible for nor is reliable for paying compensation for personal injury, pump damage and other property losses caused by violation of safety cautions.

1. Applications

1) It is applicable to household water supply, equipment support, pipeline pressurization, garden watering, vegetable greenhouse watering,fish farming and poultry raising, industrial and mining, water supply and drainage of enterprises and high-rise buildings,central air conditioner and centralized heating circulation system, etc.
2) Transfer clean water and other non-corrosive liquids with low viscosity; do not transport inflammable, explosive, gasified liquids and liquids containing solid particles or fibers. The PH of water must between 6.5 and 8.5.

2. Model Description

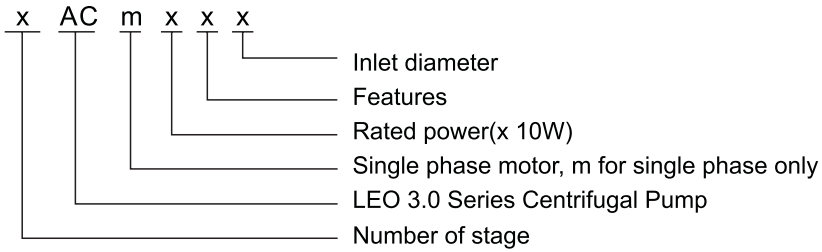

3. Technical Data

Max. flow: 1600L/min
Max. head: 110m
Output power: 0.25~7.5kW
Max. suction: 8 m
Insulation class: IPX4
Protection class: F
Max. ambient temperature: +40℃
Max. liquid temperature: +60℃

Symptom	Cause	Corrective Action
Insufficient pressure	The inlet pipeline is too long or with too many bends, pipe diameter is not selected as required.	Apply the pipe with the stipulated diameter, and make the inlet pipe short.
	Inlet pipeline, filter screen or pump chamber is blocked by foreign materials.	Clean pipeline, foot valve or pump chamber, clear sundries.
Motor works intermittently or the stator winding is burned out	The impeller is jammed or under overload operation for a long time.	Clear sundries in the pump chamber; operate the pump under the rated flow as much as possible.
	Incorrect grounding, broken cable or the electric pump is hit by lightning.	Seek for the reason, and replace winding coils.
Leakage of mechanical seal	The mechanical seal is worn and torn by impurities.	Clear or replace the mechanical seal.
Abnormal noise from the pump	Noise from the bearing.	Replace with the same type bearing.
	Impeller is jammed.	Remove foreign materials.
	Excessive flow.	Adjust to the range displayed on the nameplate before use.

10. Troubleshooting

Check the pump after power cut-off.

Symptom	Cause	Corrective Action
The motor can not be started	Single-phase power supply (three-phase electric motor): a. poor connection of the power switch; b. fuse is burned out; c. loose power lead; d. phase failure of the cable.	a. repair switch contact or replace the switch; b. replace the safety fuse; c. check and tighten the power connector; d. repair or replace cables.
	Capacitor is burned out.	Replace with a same type capacitor (send to the maintenance point for repair).
	The rotating shaft and bearing are jammed.	Replace the bearing (send to the maintenance point for repair).
	Impeller is jammed.	Turn rotating shaft of the fan blade terminal with screw driver to let it rotate flexibly or demount the pump body to clear sundries.
	Stator winding is damaged.	Replace winding coils (send to the maintenance point for repair).
The motor is in operation, but no water is discharged	Incorrect direction of pump rotation.	Invert two-phase wirings of the motor (three-phase motor).
	The pump is not fully filled with water.	Re-fill the pump with water.
	The impeller is damaged.	Replace the impeller (send to the maintenance point for repair).
	Leakage of the suction pipe.	Check sealing of various joints of the inlet pipelines.
	Water level is too low.	Adjust installation height of the pump.
	Freeze caused by accumulated water in the pipeline or the chamber.	Start up the pump after ice is melted.
Insufficient pressure	Incorrect pump type.	Select suitable pump.

4. Implementation Standards

IEC/EN 60335-1 Household and similar electrical appliances--safety Part1: General requirements.
IEC/EN 60335-2-41 Household and similar electrical appliances--safety Part2-41:Particular requirements for pump.
2014/35/EU Low voltage directive

5. Safety Precautions

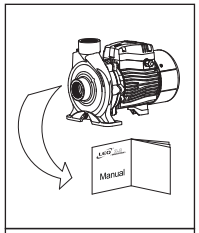

1. To ensure normal and safety operation of the electric pump, read the manual carefully before use.

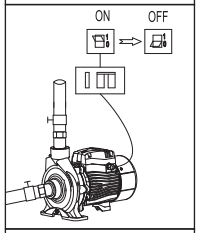

2. The electric pump should have reliable grounding to prevent short circuit; for safety, leakage protection switch should be equipped and be careful no to wet the power plug; socket should be connected in damp - proof area.

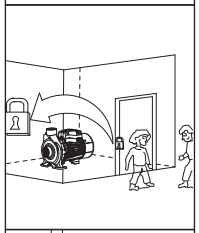

3. Do not touch the electric pump while working; do not wash, swim near working area or let livestock into the water to avoid accidents .

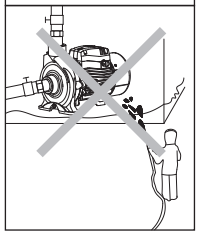

4. Avoid splashing pressured water to the electric pump as well as prevent the pump immersed by water.

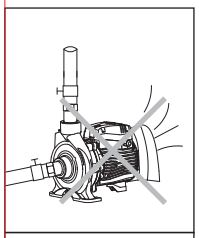

5. Keep the pump in ventilation.

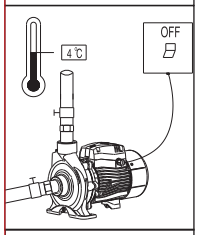

6. In case ambient temperature is lower than 4℃ or the pump is not used for a long time, empty liquid the pipeline system to avoid ice cracking of the pump chamber.
Do not operate the pump for a long time without water in it.

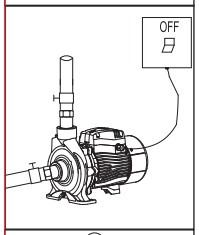

7. The pumped liquid maybe hot and under high pressure, before moving and demounting the bump, valves in both sides of the bump should be turned off first and then empty liquids in the pump and pipelines so as not to be scalded.

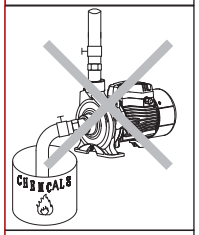

8. Do not transfer any inflammable, explosive or gasified liquids that beyond the stipulation.

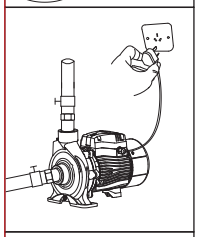

9. Ensure the pump will not be accidently turned on while installing and maintaining; if not used for a long time, cut off the power first and then turn off valves in inlet and outlet of the pump.

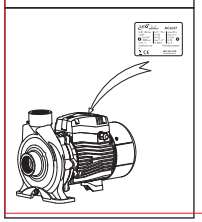

10. Power supply should be in accordance with the voltage stated in the nameplate. If not used for a long time, put the pump in dry, ventilated and cool place under room temperature.

9. Start-up and Maintenance

⚠	Do not start up the pump before the pump chamber is filled with water. Do not touch the electric pump unless its power has been cut off for at least 5 minutes. Do not dismount the pump body unless water in the pump chamber is empted.

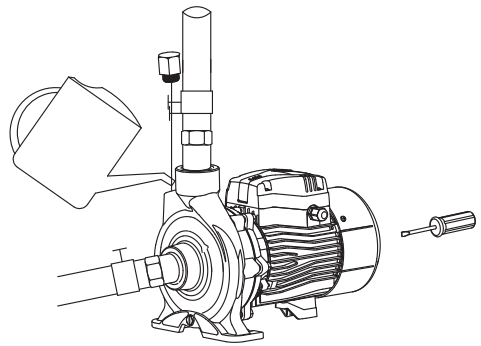

Rotate the fan blade before start-up, check whether the pump rotation is flexible and then unscrew the water-filling plug, fill the pump chamber with clean water from the water injection hole, then tighten the plug screw after the air has been completely discharged. The valve should be shut tightly while starting up the pump. After the pump discharges water and operates normally, adjust the valve to the required flow (working range is displayed on the nameplate).

Attention:

1). In case no water is discharged after being started for more than 5 minutes with water filled, turn off the electric pump, re-fill water or check whether the inlet pipeline has leakages.
2). In case of any frost and ice damages, please open the drain plug to empty water in the pump chamber. When start up the pump again, open the drain plug, fill water and tighten it and then the pump is usable.
3). In case not use for a long time, water in the pump should be emptied. The pump body, impeller and support should be cleaned and coated with anticorrosive oil before they are put in a ventilated and dry place for use.
4). In case the pump is halted for a long time, start it up again according to above diagram.
5). In summer or when the ambient temperature is high, pay attention to ventilation, avoid dew on electrical parts which will result in electrical faults.
6). In case the motor is hot or abnormal, cut off the power immediately and check faults according to the following table.

8. Electrical Connection

⚠	Unless the power is off, do not wiring the junction box. The electric pump should have reliable grounding to prevent current leakage with leakage protection switch being equipped.

1). Electrical connection and protection should be conducted according to stipulations. Specification of working voltage is marked on the nameplate; please ensure the motor is in accordance with power supply.
2). In case the working area of the electric pump is too far from the power supply, power transmission lines should be of a heavier gauge, otherwise the electric pump cannot work normally because the voltage drop is too dramatic.
3). A rubber extension cable shall be applied for the electric pump in case of outdoor use.
4). Check rotation of the motor (three-phase motor).
5). Check whether operation of the electric pump is normal, rotation is correct, which could be observed from the fan blade terminal, e.g. clockwise rotation means correct direction. In case the rotation is incorrect, cut off power and exchange the two power cables.

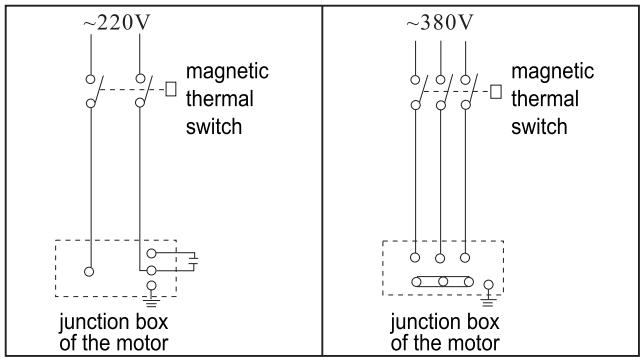

6. Product Structure

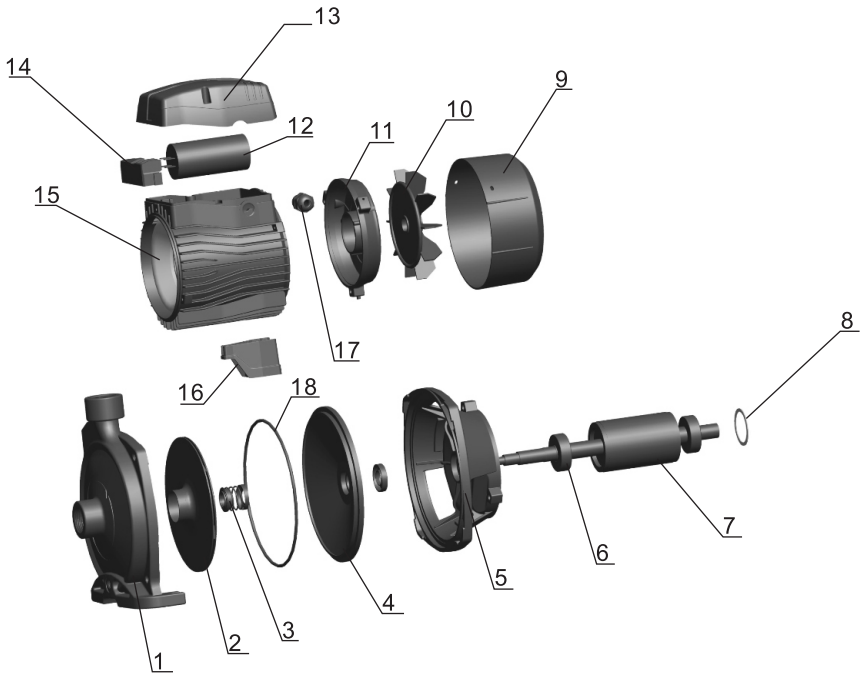

POS.	Part
1	Pump body
2	Impeller
3	Mechanical seal
4	Seal holder
5	Pump support
6	Bearing
7	Rotor
8	Spring washer
9	Fan cover

POS.	Part
10	Fan
11	End plate
12	Capacitor
13	Capacitor box
14	Terminal board
15	Stator
16	Bracket
17	Cable holder
18	O-sealing ring

7. Pipeline Installation

This product should be installed and maintained by personnel who is proficient in this manual and has special qualifications. Installation and operation should be in accordance with local regulations and recognized operation standards.
Install pipelines properly as stipulated in the manual and meanwhile conduct frost protection measures for the pipeline.

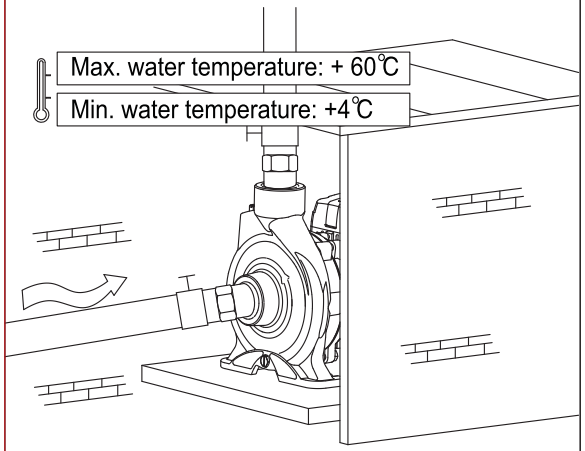

1. For pump installation, the inlet pipe should be as short as possible with the least turnings. The pump should be installed in ventilated and dry environment. It could be installed outside, provided having proper covering to prevent rain and wind.
2. For pipeline use, valves should be installed on inlet and outlet pipelines and the inlet pipeline should be installed with check valve.

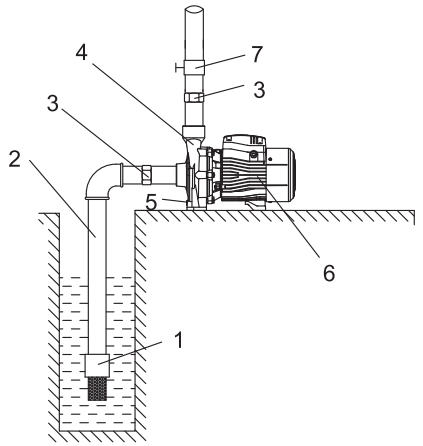

Correct Installation Diagram A

Incorrect Installation Diagram B

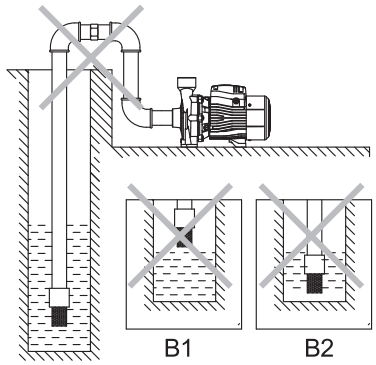

A:

1. Foot valve
2. Inlet pipe
3. Tie-in
4. Filling plug
5. Drain plug
6. Electric pump
7. Valve

B: Installation precautions for inlet pipelines

1). While installing the electric pump, do not use too soft rubber tube for the inlet pipeline, avoiding to be sucked flat.
2). The foot valve should be vertically placed and installed 30cm from water bottom to avoid sucking in sands and stones (B2);
3). Joints of the inlet pipelines should be sealed with the least elbows, no water can be sucked.
4). Diameter of the inlet pipe should be at least in accordance with that of the water inlet, so as to avoid too much water loss which will influence outlet performance.
5). Pay attention to drop of water level while using, the foot valve should not be above the water surface (B1).
6). In case the inlet pipe is longer than 10m or its lifting height exceeds 4m, the pipe diameter should exceed diameter of water inlet of the pump.
7). Ensure the pumped will not be affected by pipeline pressures while installing the pipelines.
8). Filter should be installed in inlet pipelines so as to avoid solid particlesto enter into the electric pump.

C: Installation Precautions of the outlet pipeline

Pipe diameter of the outlet pipeline should be at least in accordance with that of the water outlet, so as to reduce its voltage drop, high flow rate and noise to the minimum.