XKP-04 Swimming pool pump > 500 W

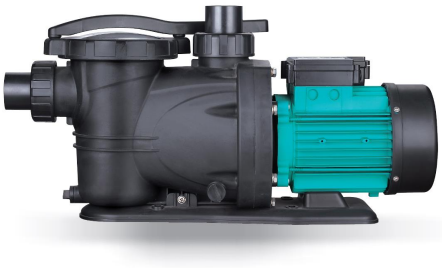



Application

- Suitable for water circulation in small and medium swimming pools. Lightly dirty water with suspended particles will be perfectly filtered

Pompe

- Plastic body pump
- AISI 304 stainless steel shaft
- Maximum liquid temperature: +35°C
- Maximum suction height: 3.5 m

Moteur

- Copper winding motor or aluminium
- Integrated thermal protection for single-phase motors
- Insulation class: F
- Protection class: IPX5

Identification codes

XKP 16 06

- 06 — series
- 16 — Power (x100 W)
- XKP — pool pump

Technical data

MODEL	kW	Q (m³/h)	3	6	9	12	15	18	21	24	27	30
		Q (l/min)	50	100	150	200	250	300	350	400	450	500
XKP554	0.55		9.7	9	8	6	3.2	0.5				
XKP804	0.8		10.8	10.3	8.8	7	4.5	1.5				
XKP904	0.9		13.2	12.3	11.1	9.2	6.5	3.4	0.2			
XKP1104	1.1		14.8	14.2	13.2	12	10.3	8	4.8			
XKP1604	1.6		16.8	16.3	15.5	14.5	13.5	12	9.6	7	3.5	
XKP2204	2.2		17.8	17.3	16.5	16	14.8	13.4	11.7	9.5	6.5	3.3

Dimensions

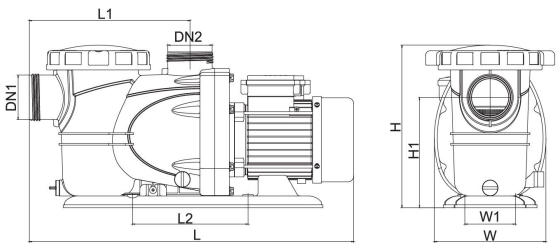

MODEL	DN1	DN2	L	W	H	L1	L2	H1
XKP554	50	50	554	190	276	274	197	187
XKP804	50	50	554	190	276	274	197	187
XKP904	50	50	554	190	276	274	197	187
XKP1104	50	50	554	190	276	274	197	187
XKP1604	50	50	584	190	276	274	197	187
XKP2204	50	50	584	190	276	274	197	187

Hydraulic performance

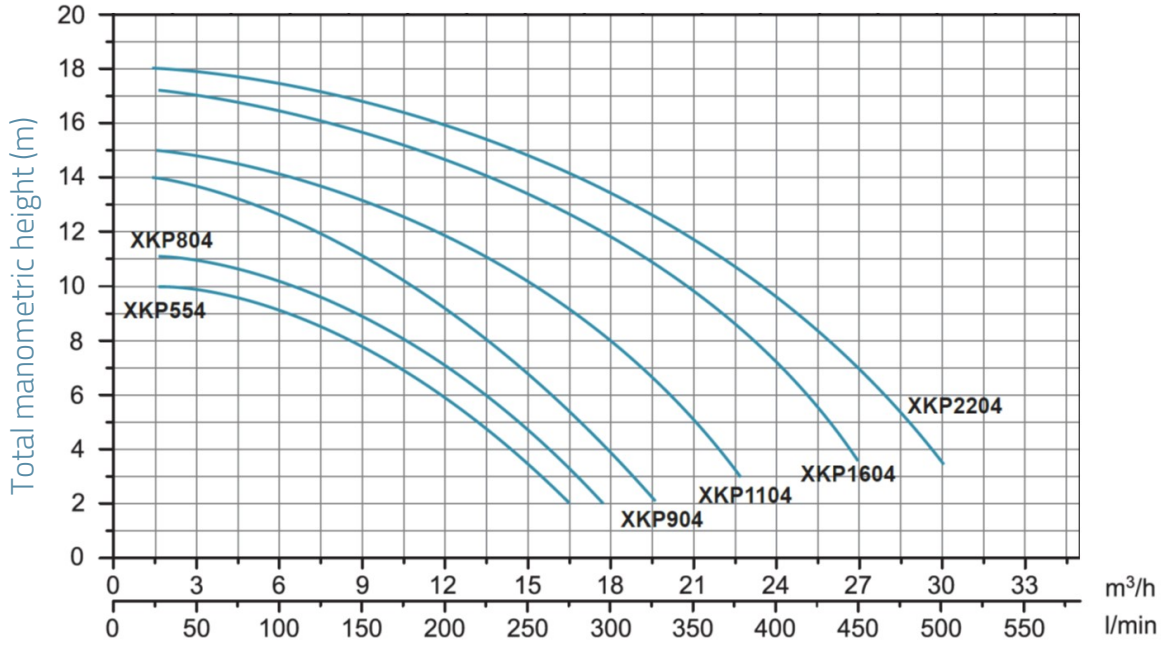

Exploded view

No.	Type
1	Drain plug
2	O-ring
3	Valve body
4	Pump body
5	Seal
6	Diffuser
7	Impeller
8	Mechanical seal
9	O-ring
10	Lower support
11	Lantern
12	Rear cover
13	Fan cover
14	Fan
15	Power cable
16	Rear cover
17	Electric box cover
18	Capacitor
19	Terminal Box
20	Stator
21	Bearing
22	Rotor
23	O-ring
24	Connection
25	Nut
26	O-ring
27	Basket
28	Waterproof cover
29	Nut
30	Wrench

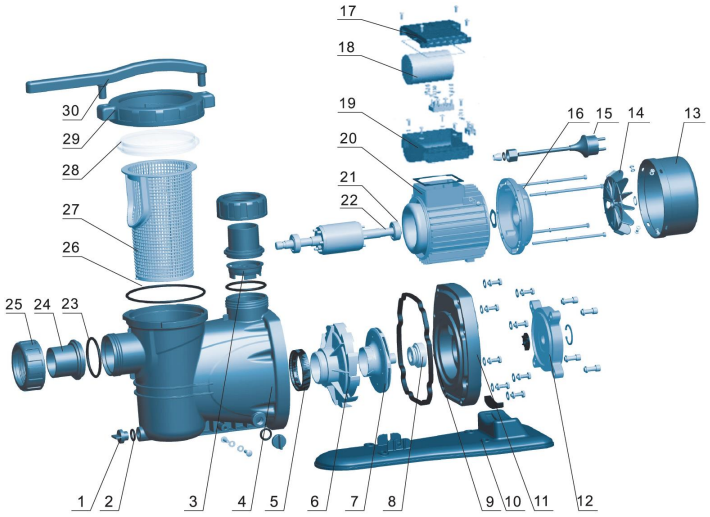

Packaging

MODEL	Weight (kg)	Length L (mm)	Width W (mm)	Height H (mm)
XKP554	10.4	585	220	290
XKP804	11.1	585	220	290
XKP904	12.1	585	220	290
XKP1104	12.8	585	220	290
XKP1604	16.1	615	230	290
XKP2204	17.7	615	230	290

